HEADBOARD SET ASSEMBLY INSTRUCTION (TOTAL 1 BOX)

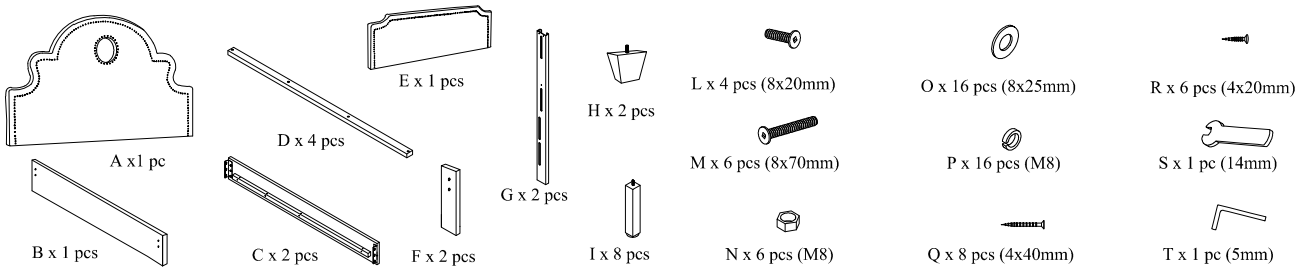

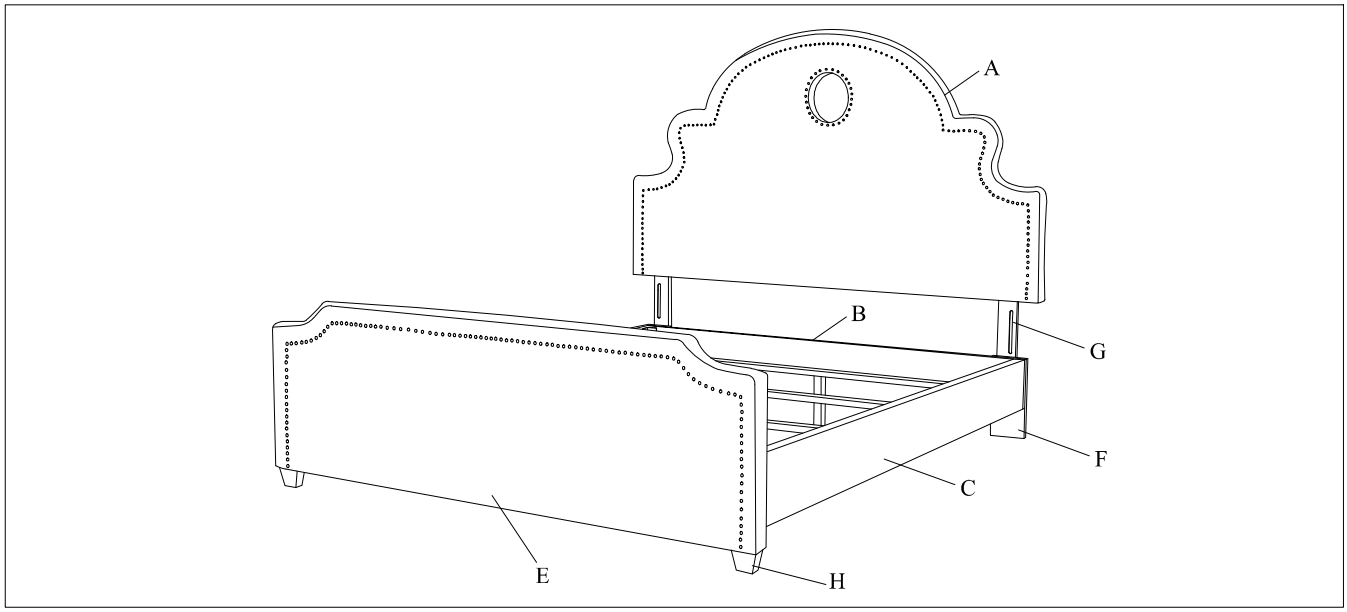

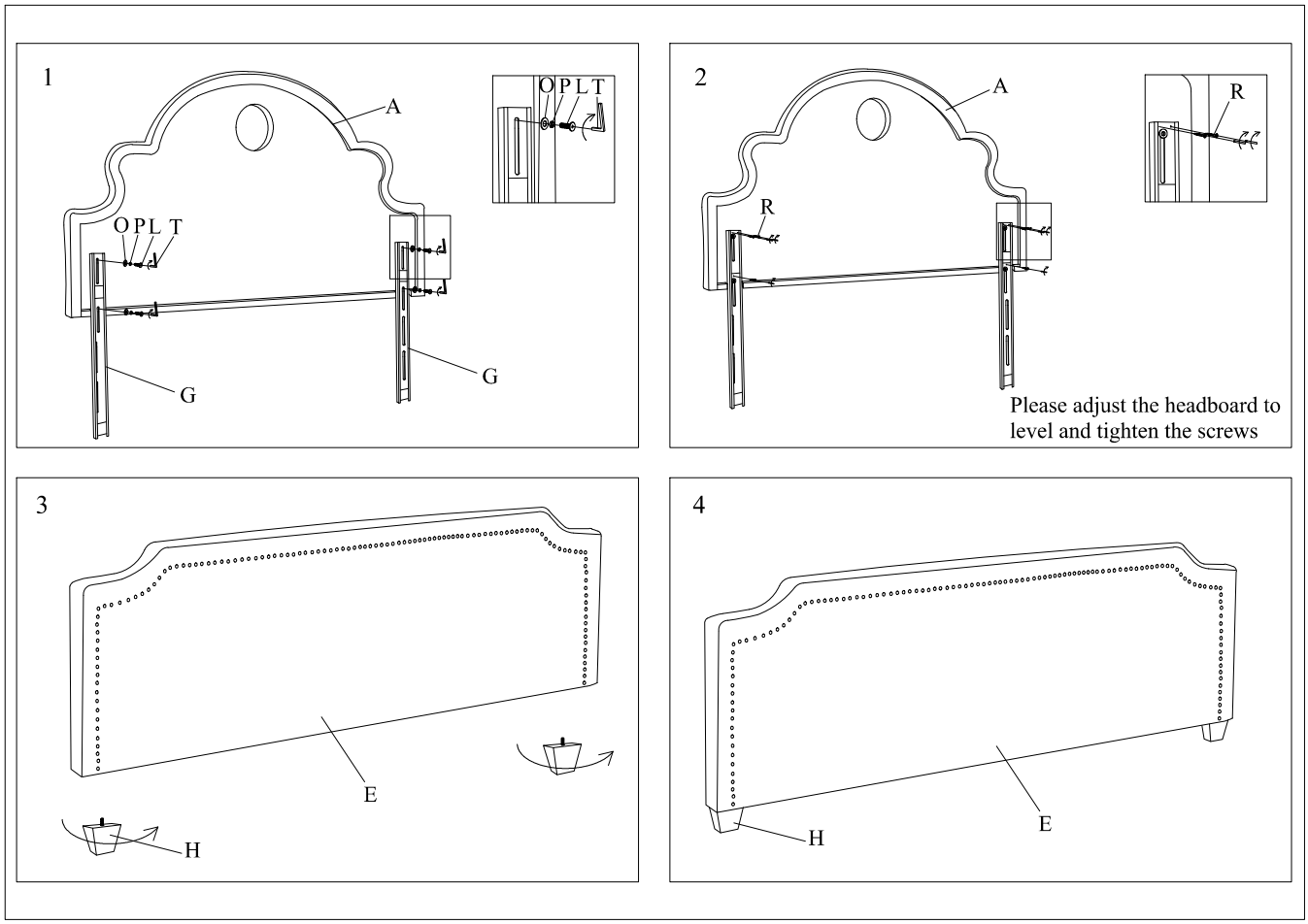

5

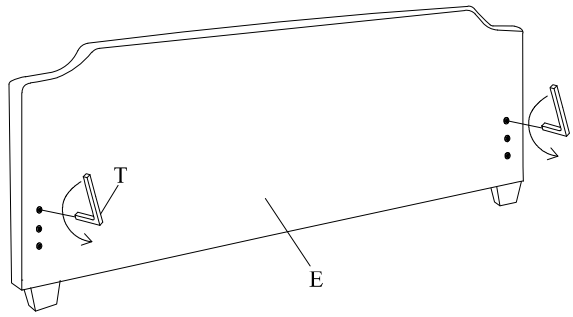

6

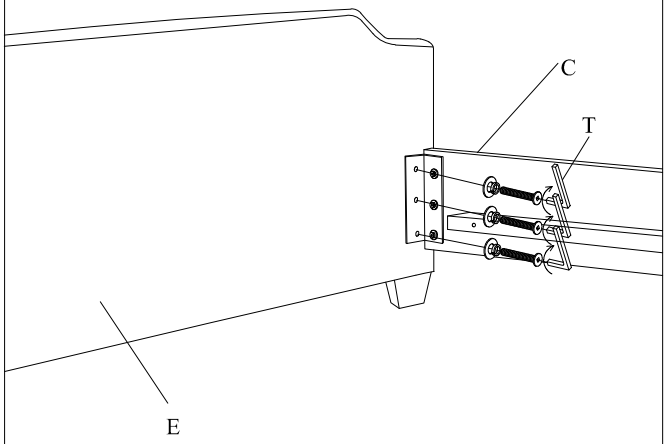

7

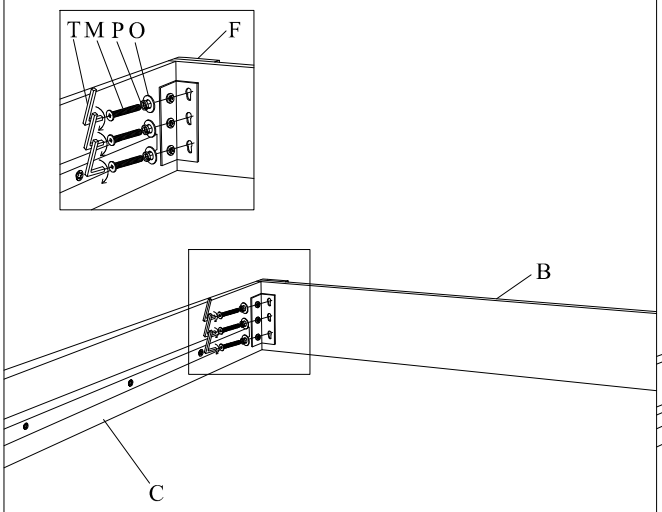

8

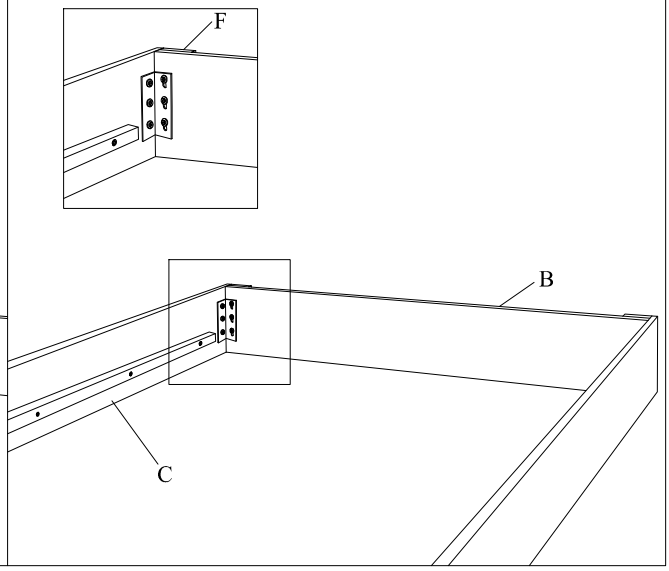

9

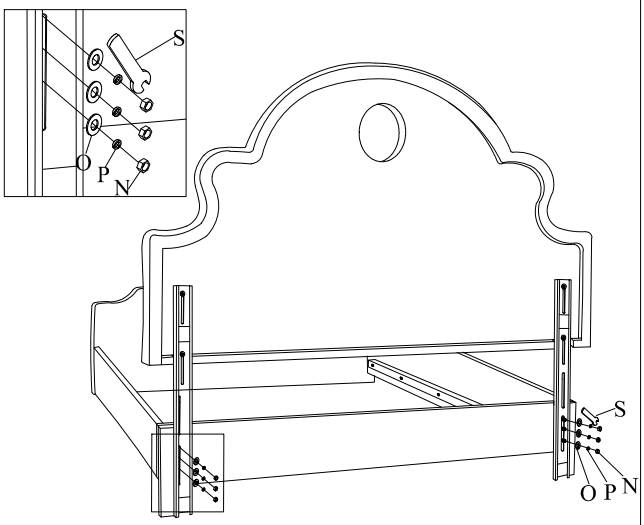

10

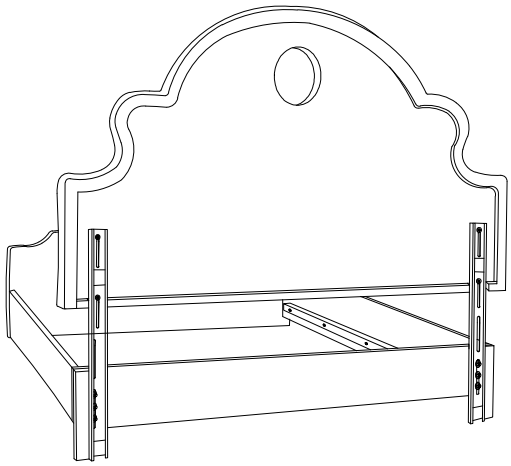

11

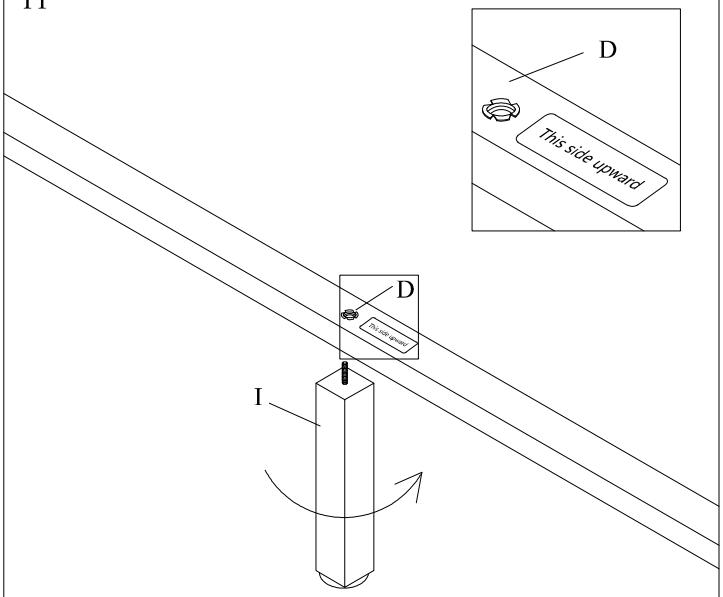

12

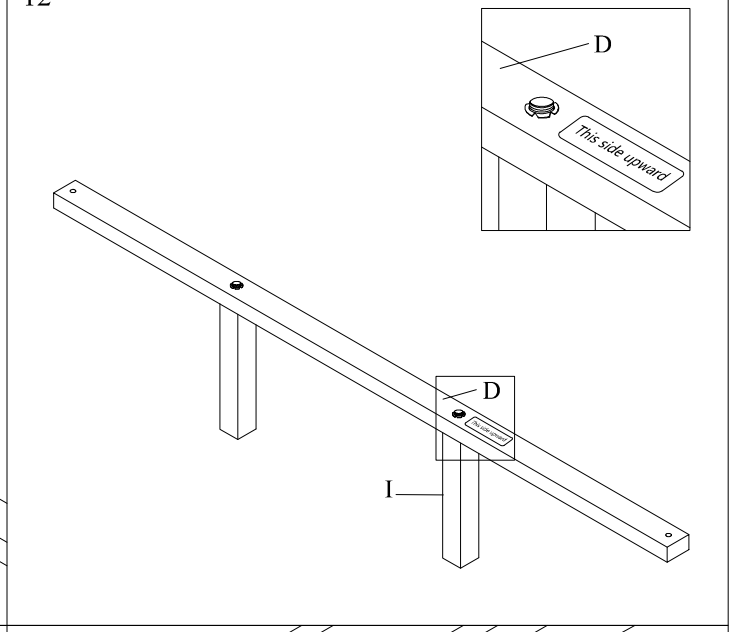

14

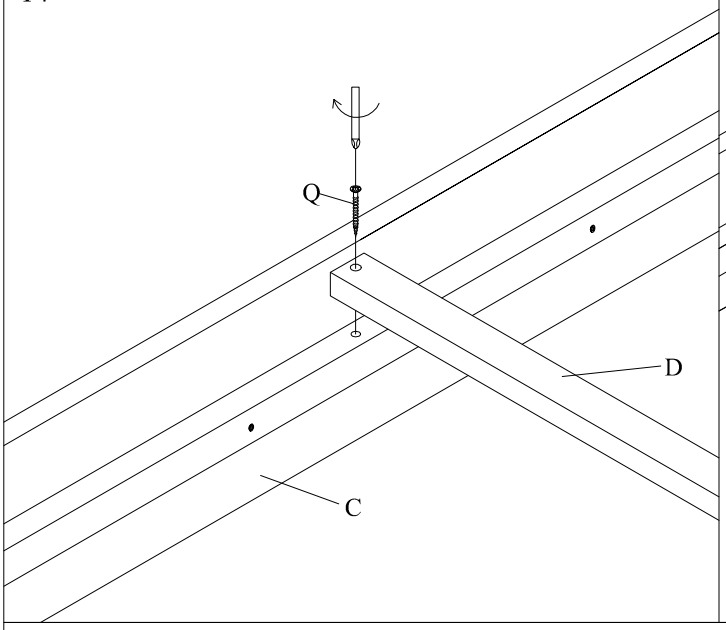

13

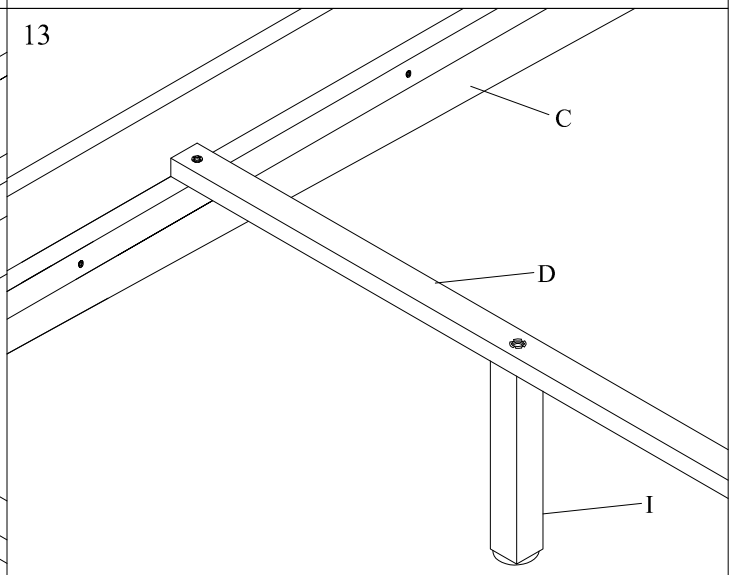

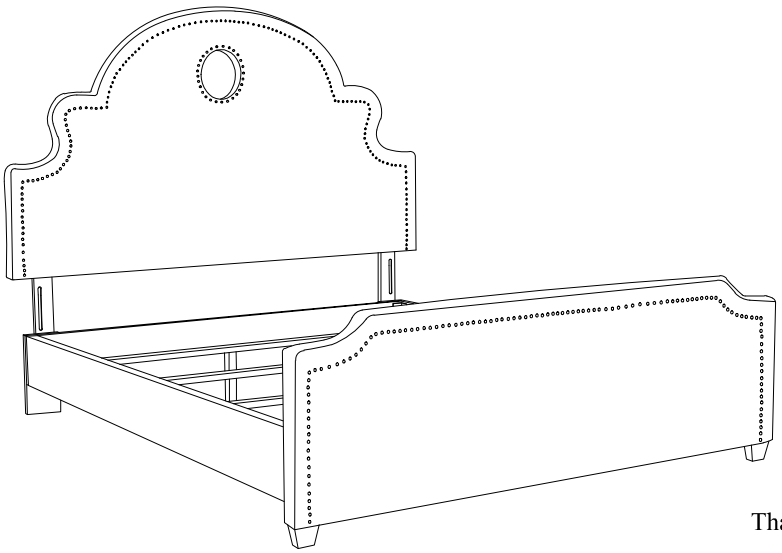

Thank you for your purchase.