Jennifer Taylor®
By ACG Green Group, Inc.

www.jennifertaylorhome.com

Scan to watch the
65000 assembly video

DAYBED WITHOUT MATTRESS ASSEMBLY INSTRUCTION（ TOTAL 1 BOX ）

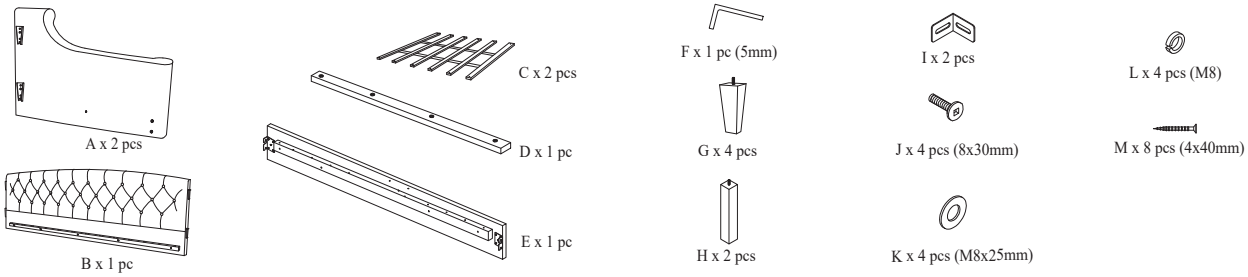

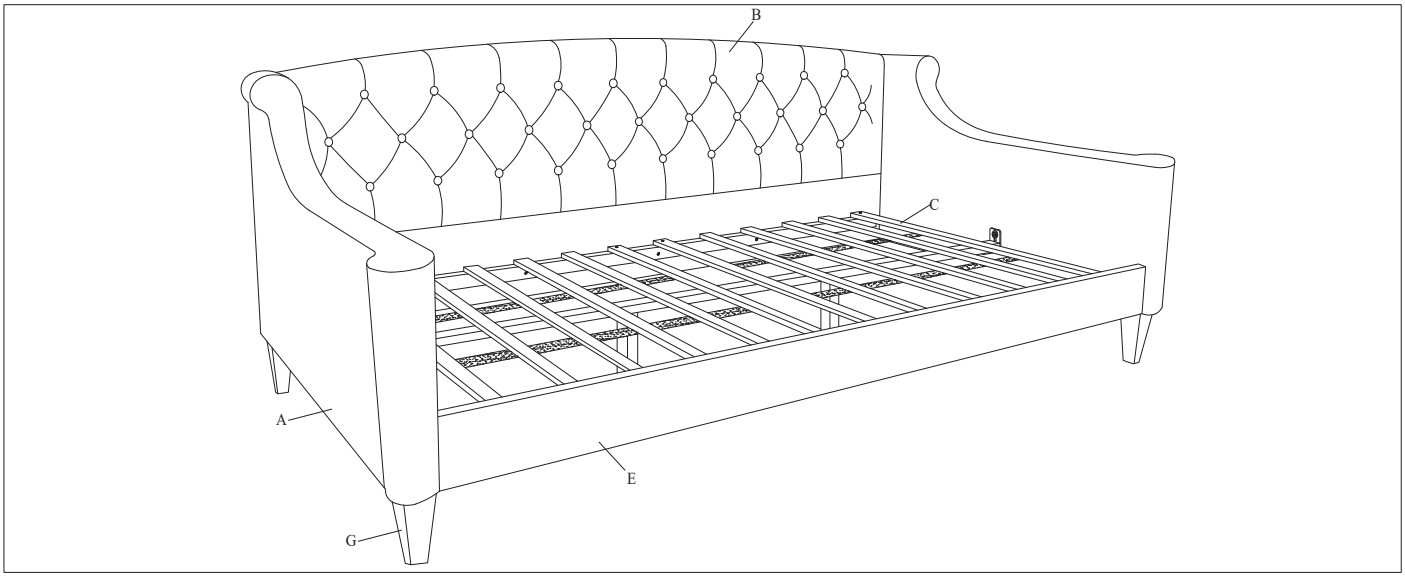

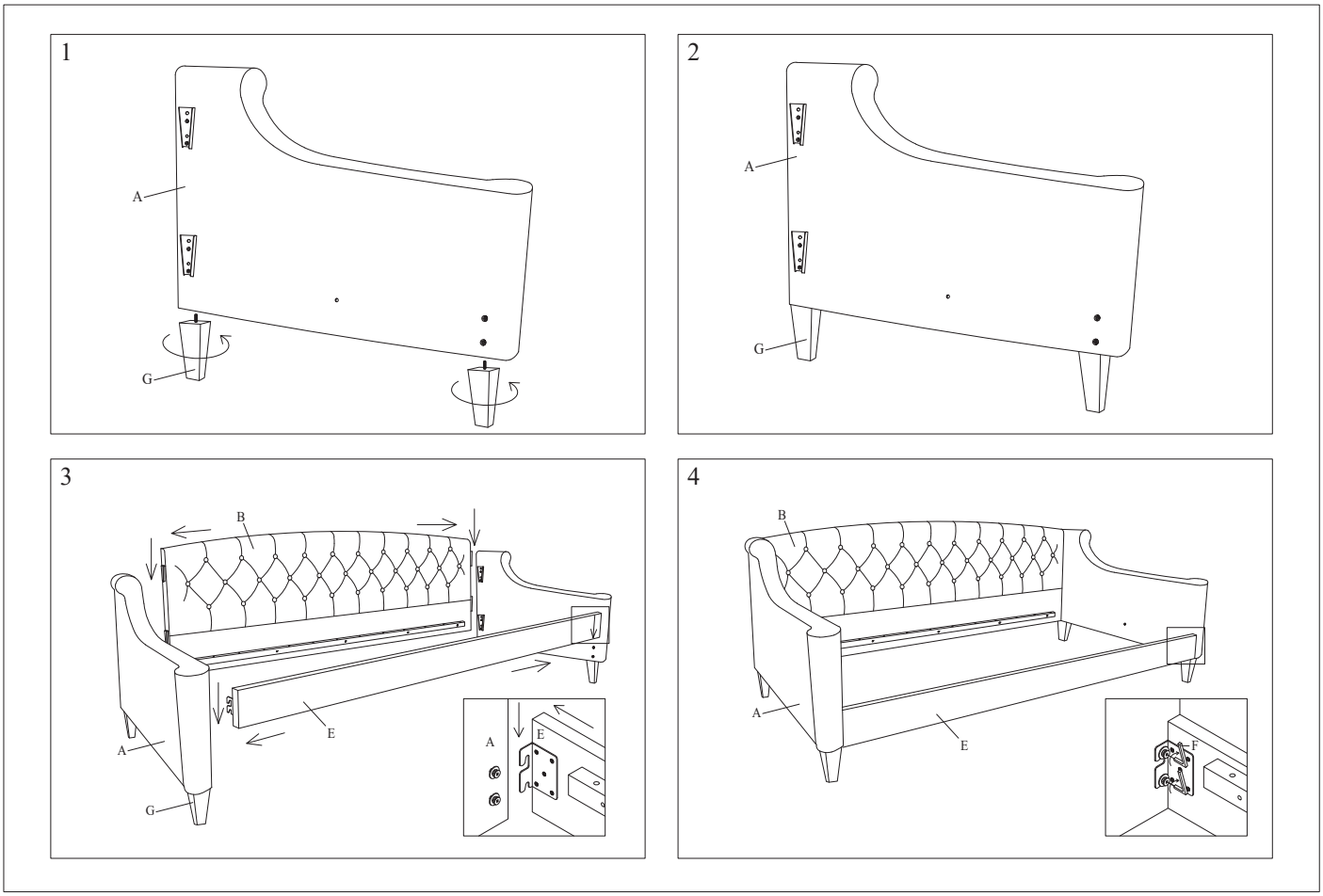

5

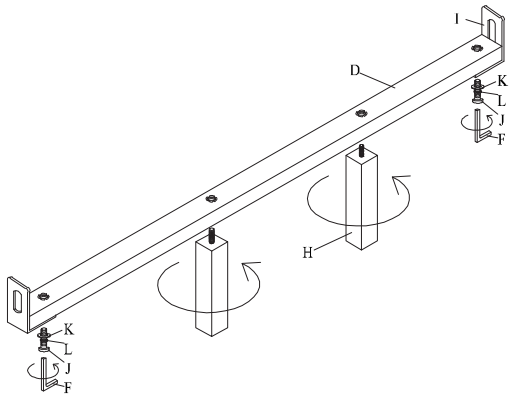

6

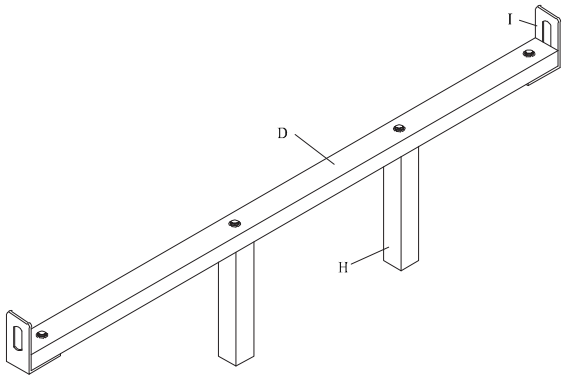

7

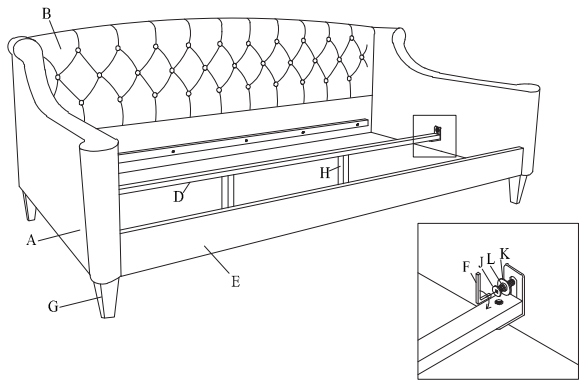

8

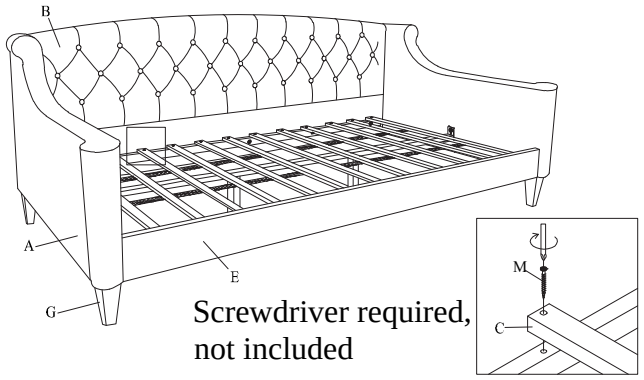

Screwdriver required,
not included

9

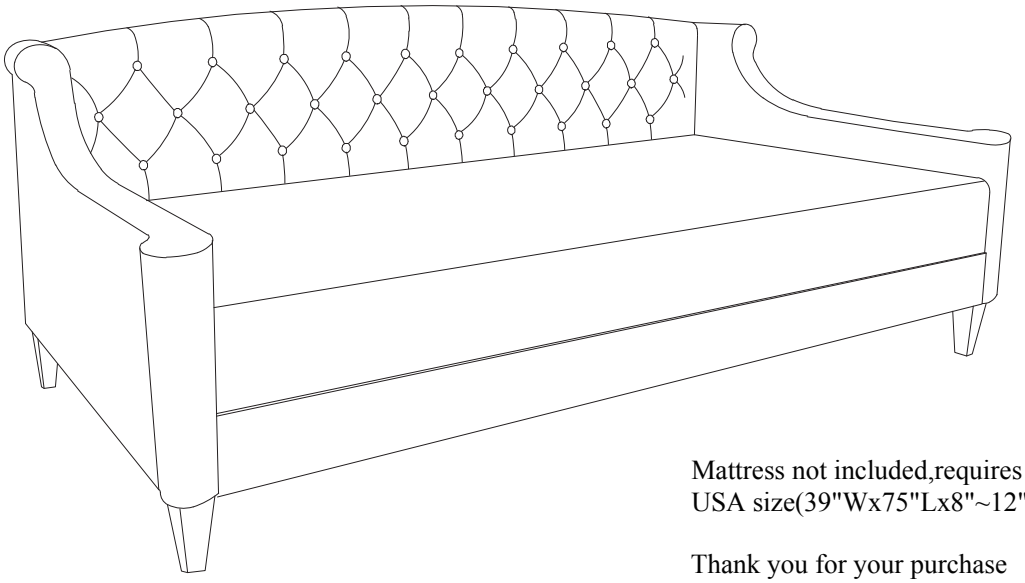

Mattress not included,requires a standard twin USA size(39"Wx75"Lx8"~12"H) mattress.

Thank you for your purchase